Introduction to Motor Demo System

2021/May

Demo System

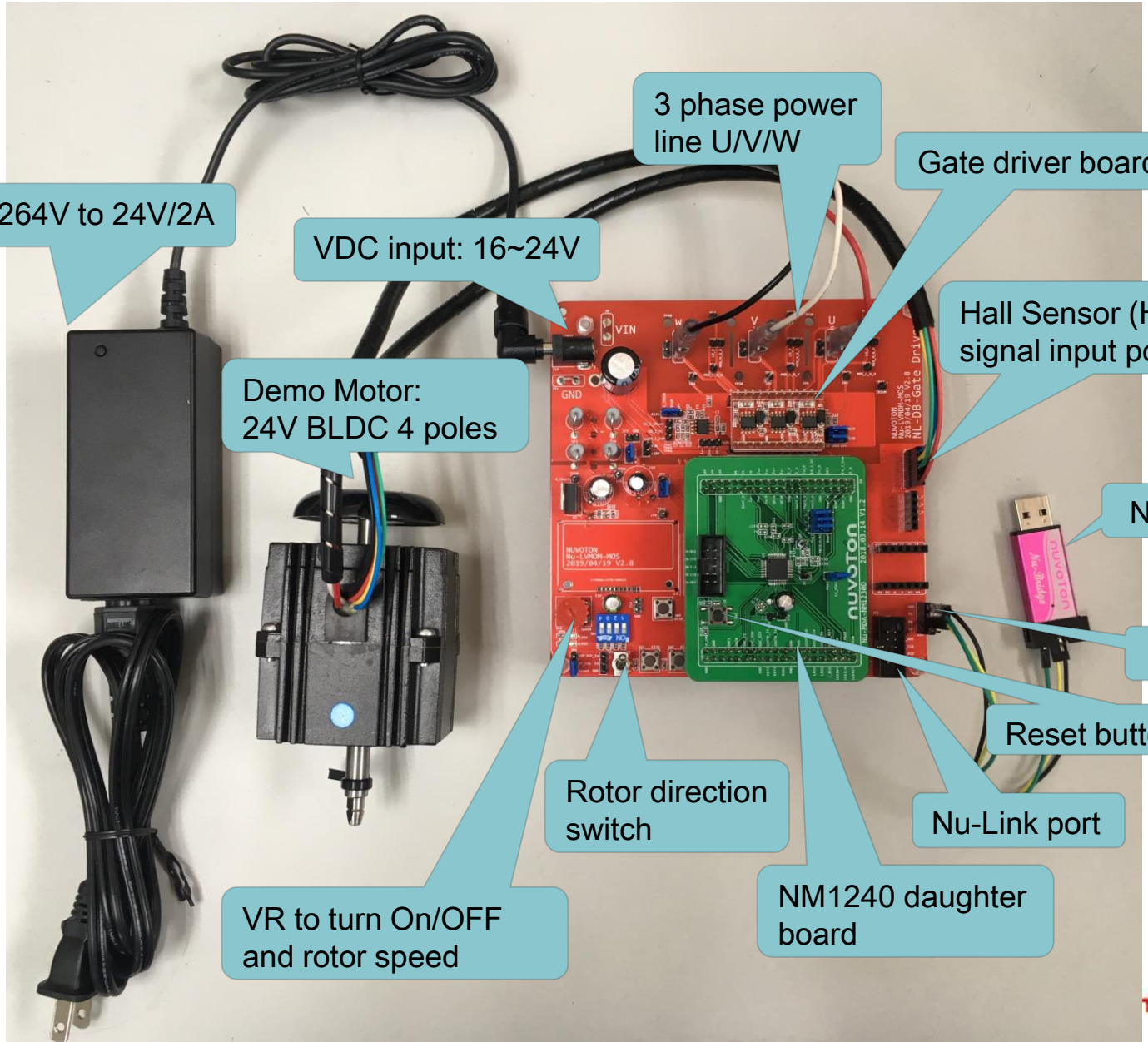

ntial

Demo Purpose

- **Easily & Rapidly Getting Start for Motor Application**
  - Provide demo system for refer-design

- **Motor Drive System**
  - Elementary S/W flow
  - Refer H/W circuit

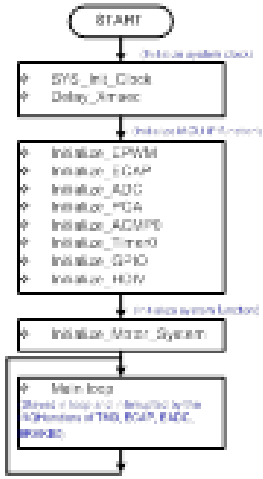

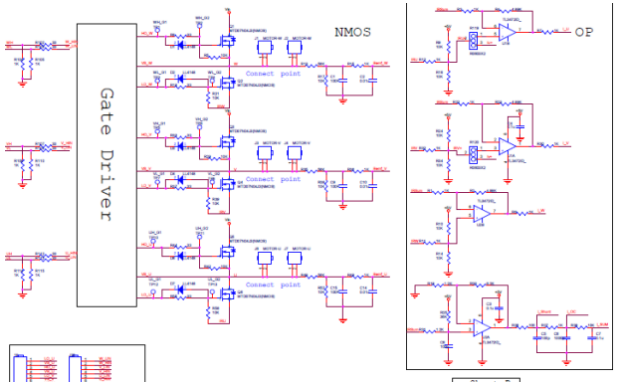

- **Friendly GUI Interface Linking PC and System Board through UART(COM port)**
  - User can easily demo motor behavior

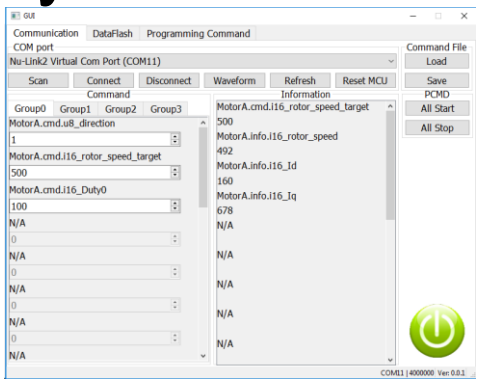

nuvoTon confidential

Demo Functions

- Hall + FOC + 2-shunt R
- Hall + FOC + 1-shunt R
- Hall + Six step square wave control
- Provide multiple algorithms for motor driving
  - FOC + SVPWM
  - PI control for speed or current control
  - Motor speed estimated
- Friendly GUI interface
  - Tune parameters to control motor speed

Demo System Catching

- MCU initialization
  - MCU initialize
  - Timer
  - ECAP (Enhance Capture Timer/Counter)
  - Complementary PWM0~5 setting
  - 12-bit 2-S/H ADC
  - OP
  - ACPM (Analog Comparator)
  - UART and GDMA
- Computing
  - Fixed point + - x ÷
- Motor speed control
  - FOC
  - 6-six square wave

nuvoTon confidential

GUI of Motor

- ✓ GUI of Motor: on-line tuning
- ✓ Dynamic display. ex: motor speed, current Ia
- ✓ Easily define parameter
- ✓ Handy setting/Reading parameters on PC side

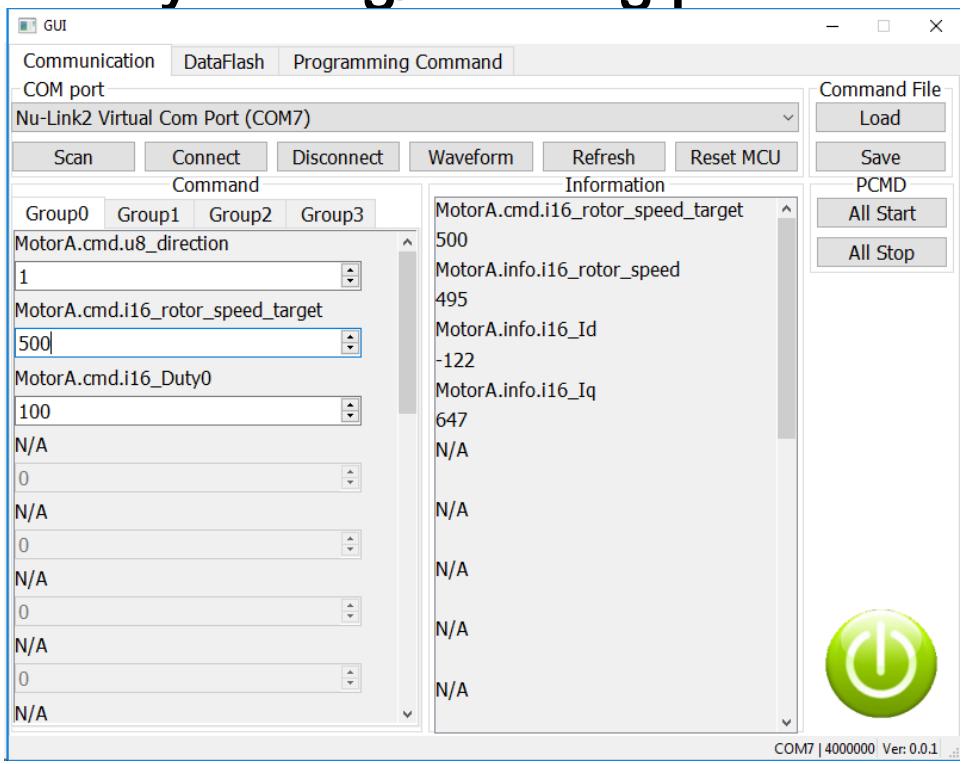

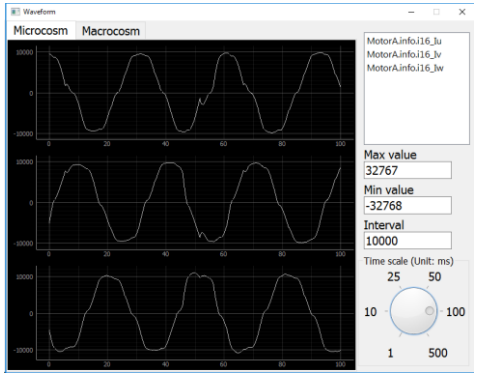

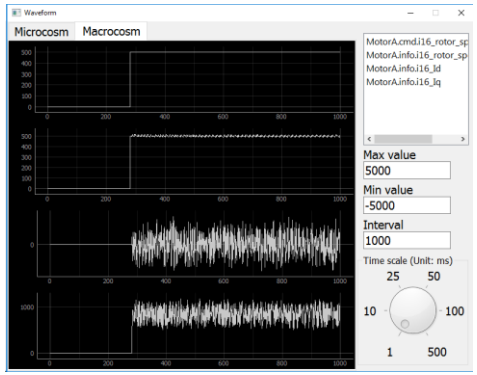

nuvoTon confidential

FOC Control Block

- Demo System: Hall + FOC
- Control mode: 2R / 1R (R: current shunt resistance)

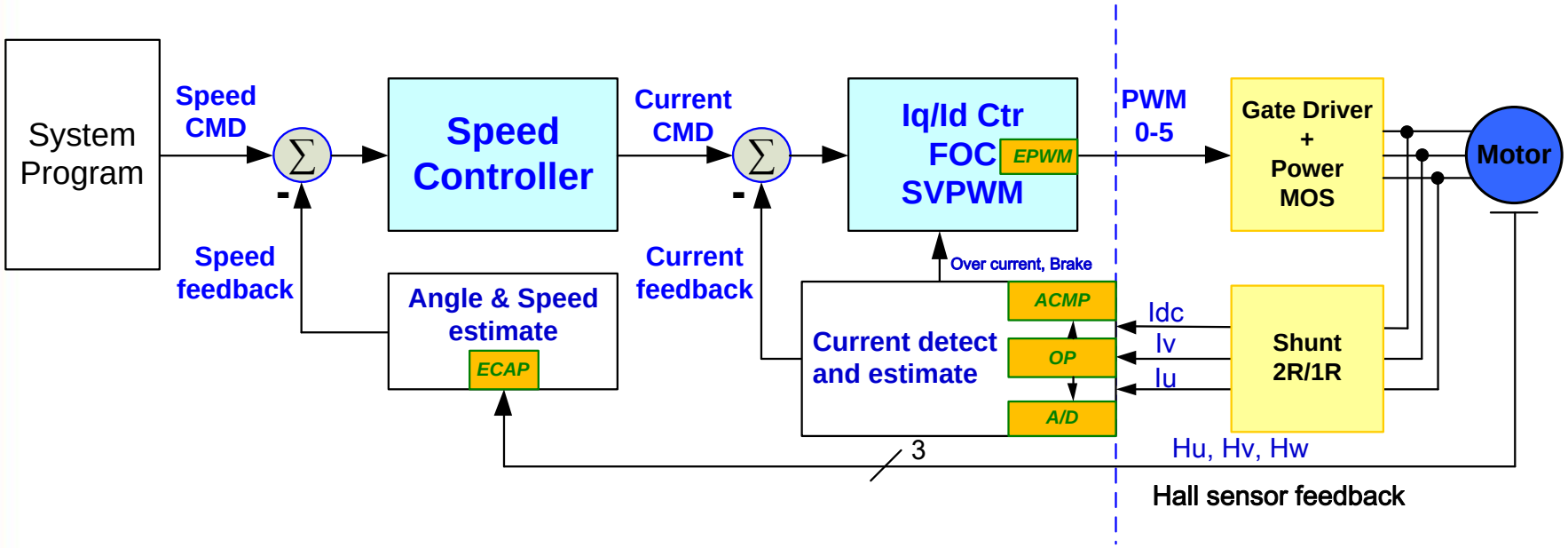

Demo System
Hall + FOC + 2R

Speed Control by FOC

- FOC: Field Oriented Control, 磁場導向控制
- Vector Control: 向量控制，矢量控制
- a-b-c stationary frame
- α-β stationary frame
- d-q stationary frame

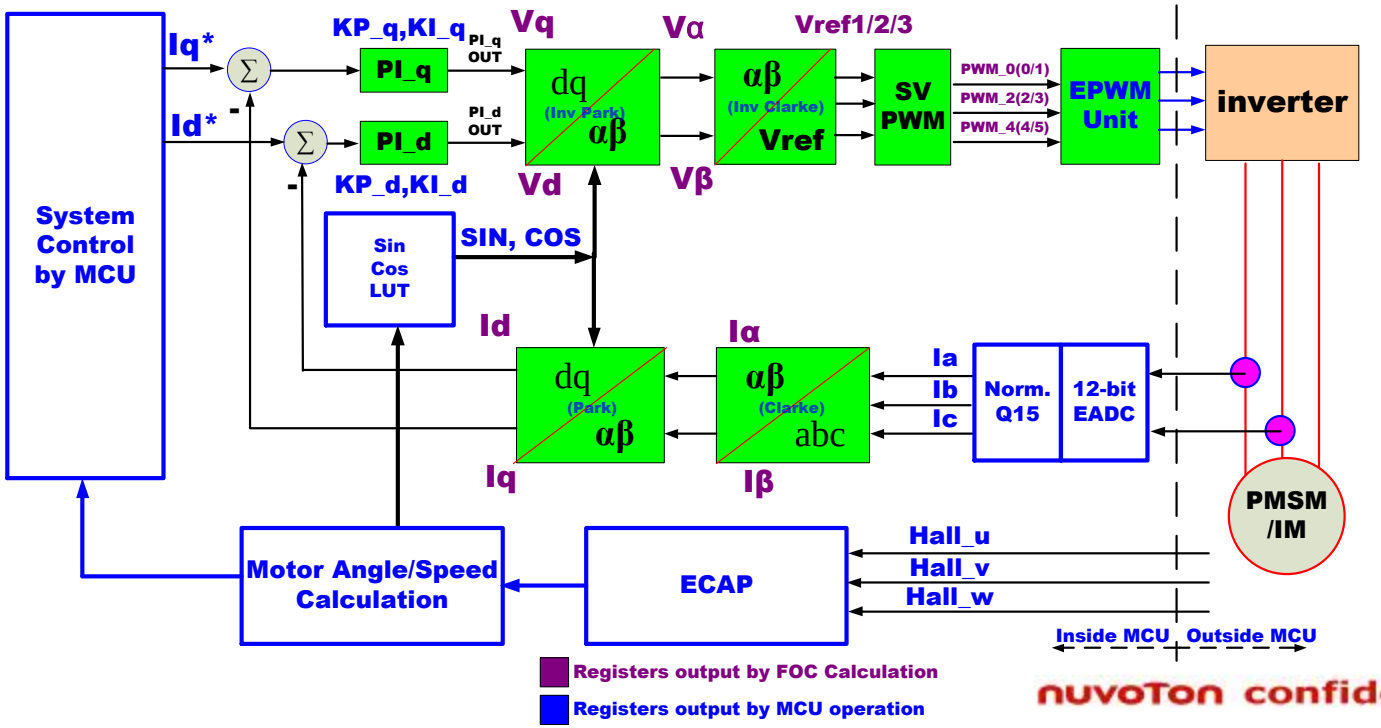

nuvoTon confidential

6-Step Square Wave Control

- Demo System : Hall + Six Step square wave control
- Control mode : Speed close loop

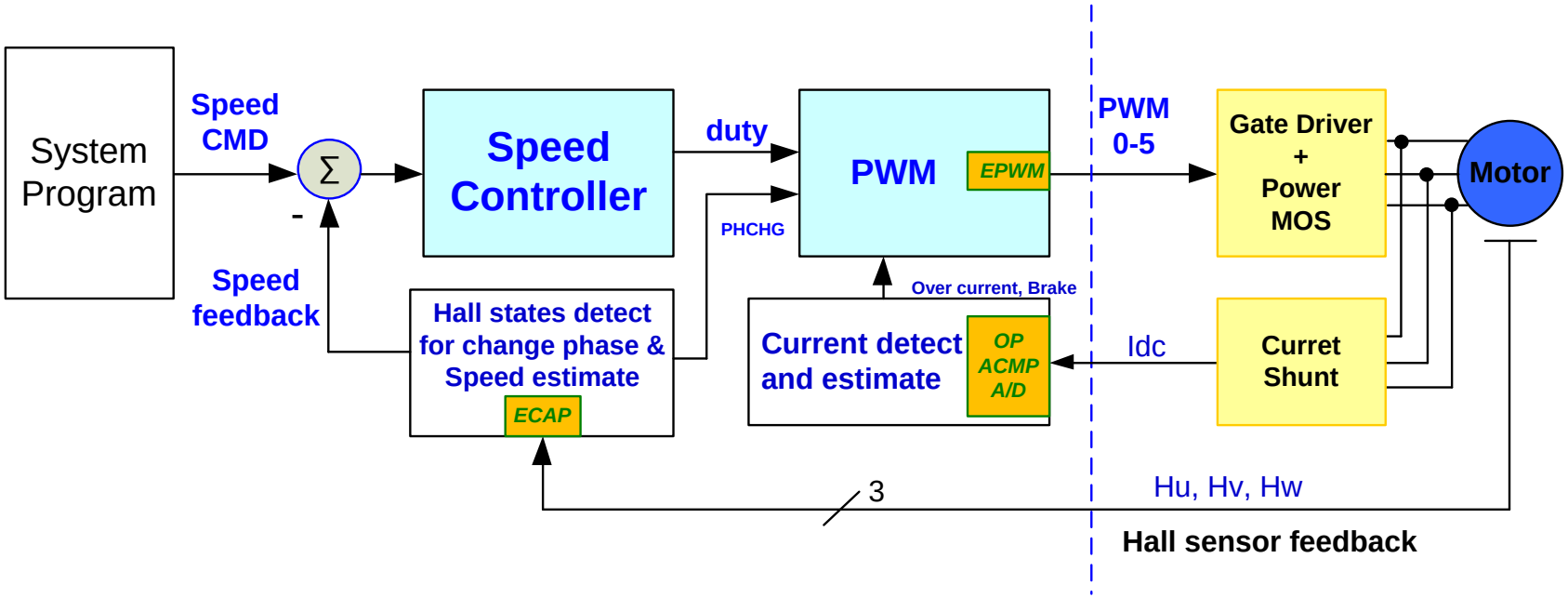

Conclusion

- Quickly Start
  - Provides Hall + FOC, Hall + 6-six square wave functions. S/W follow & ref-H/W circuit
- Flexible GUI interface
  - Easily tune the parameters for adjusting system performance
  - Graphic variables dynamic on screen

THANK YOU